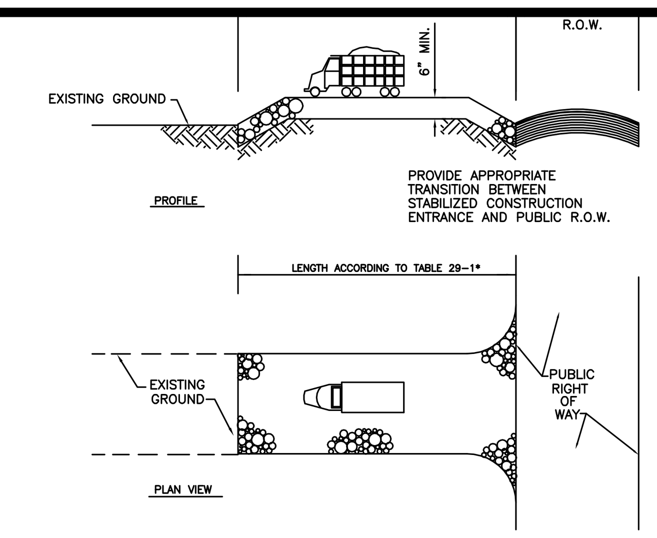

STABILIZED CONSTRUCTION ACCESS

NOT TO SCALE

LENGTHS OF CONSTRUCTION EXITS ON SLOPING ROADBEDS

PERCENT SLOPE OF ROADWAY	LENGTH OF STONE REQUIRED	
	COARSE GRAINED SOILS	FINE GRAINED SOILS
0–2%	50 FT.	100 FT.
2–5%	100 FT.	200 FT.
>5%	ENTIRE SURFACE STABILIZED	WITH FABC BASE COURSE

DUST CONTROL

WHEN REQUIRED ONE OR MORE OF THE FOLLOWING METHODS SHALL BE USED FOR DUST CONTROL:

MULCHES – SEE NOTES FOR TEMPORARY STABILIZATION

VEGETATIVE COVER – SEE NOTES FOR TEMPORARY AND PERMANENT STABILIZATION

SPRAY-ON ADHESIVES – ON MINERAL SOILS (NOT EFFECTIVE ON MUCK SOILS) KEEP TRAFFIC OFF THESE AREAS

	WATER DILUTION	TYPE OF NOZZLE	APPLY GAL/ACRE
ANIONIC ASPHALT EMULSION	7:1	COARSE SPRAY	1,200
LATEX EMULSION	12.5:1	FINE SPRAY	235
RESIN IN WATER	4:1	FINE SPRAY	300
POLYACRYLAMIDE (PAM) – SPRAY ON POLYACRYLAMIDE (PAM) – DRY SPRAY	APPLY ACCORDING TO MANUFACTURER'S INSTRUCTIONS. MAY ALSO BE USED AS AN ADDITIVE TO SEDIMENT BASINS TO FLOCCULATE AND PRECIPITATE SUSPENDED COLLOIDS. SEE SEDIMENT BASIN STANDARD		
ACIDULATED SOY BEAN SOAP STICK	NONE	COARSE SPRAY	1200

TILLAGE – TO ROUGHEN SURFACE AND BRING CLODS TO THE SURFACE. THIS IS A TEMPORARY EMERGENCY MEASURE WHICH SHOULD BE USED BEFORE SOIL BLOWING STARTS. BEGIN PLOWING ON WINDWARD SIDE OF SITE. CHISEL-TYPE PLOWS SPACE ABOUT 12 INCHES APART, AND SPRING-TOOTHED HARROWS ARE EXAMPLES OF EQUIPMENT WHICH MAY PRODUCE DESIRED EFFECT.

SPRINKLING – SITE IS SPRINKLED UNTIL THE SURFACE IS WET.

BARRIERS – SOLID BOARD FENCES, SNOW FENCES, BURLAP FENCES, CRATE WALLS, BALES OF HAY, AND SIMILAR MATERIAL CAN BE USED TO CONTROL AIR CURRENTS AND SOIL BLOWING.

CALCIUM CHLORIDE – SHALL BE IN THE FORM OF LOOSE, DRY GRANULES OR FLAKES FINE ENOUGH TO FEED THROUGH COMMONLY USED SPREADERS AT A RATE THAT WILL KEEP SURFACE MOIST BUT NOT CAUSE POLLUTION OR PLANT DAMAGE. IF USED ON STEEPER SLOPES, THEN USE OTHER PRACTICES TO PREVENT WASHING INTO STREAMS OR ACCUMULATION AROUND PLANTS.

STONE – COVER SURFACE WITH CRUSHED STONE OR COARSE GRAVEL.

SOIL EROSION AND SEDIMENT CONTROL

1. All soil erosion and sediment control practices will be installed in accordance with the New Jersey Standards for Soil Erosion and Sediment Control and will be installed in proper sequence and maintained until permanent protection is established.
2. Any disturbed area that will be left exposed for more than thirty (30) days and not subject to construction traffic shall immediately receive a temporary seeding. If the season prohibits temporary seeding, the disturbed area will be mulched with salt hay or equivalent and be anchored in accordance with the NJ Standards (i.e. peg and twine, mulch netting, or liquid mulch binder).
3. Immediately following initial disturbance or rough grading, all critical areas subject to erosion will receive a temporary seeding in combination with straw mulch or a suitable equivalent at a rate of 2 tons per acre, according the NJ Standards.
4. Stabilization Specifications – Temporary Seeding and Mulching:
   a. Lime – 90 lbs/1,000 sf ground limestone; Fertilizer – 14 lbs/1,000 sf; 10-20-10 or equivalent worked into soil a minimum of 4".
   b. Seed – Annual Ryegrass 40 lbs/acre or other approved seeds; plant between March 1 and May 15 or between August 15 and October 1.
   c. Mulch – salt hay or small grain straw at a rate of 70 to 90 lbs/1,000 sf to be applied according to the NJ Standards. Mulch shall be secured by approved methods (i.e. peg and twine, mulch netting, or liquid mulch binder).
5. A sub-base course will be applied immediately following rough grading and installation of improvements in order to stabilize driveways. In areas where no utilities are present, sub-base will be installed within 15 days of preliminary grading.
6. The site shall at all times be graded and maintained such that all stormwater run-off is diverted to soil erosion and sediment control facilities.
7. Any steep slopes receiving pipeline installation will be backfilled and stabilized daily, as the installation proceeds (i.e. slopes greater 3:1).
8. All sedimentation structures will be inspected and maintained on a regular basis.
9. Maximum side slopes of all exposed surfaces shall not exceed 2:1 unless otherwise approved by the district.
10. Any individual access roads or drives must be stabilized with 2- 1/2" crushed stone prior to commencement of construction in that area.
11. Paved roadways must be kept clean at all times.
12. All catch basin inlets must be protected with a crushed stone or haybale filter (see detail).
13. Permanent vegetation to be seeded or sodded on all exposed areas within ten (10) days after final grading. Mulch to be used as necessary for protection until seeding is established.
14. Permanent Stabilization Specifications: Seeding
    Perennial Ryegrass . . . . 1/2 lb/1,000 sf
    Kentucky Bluegrass . . . . 1 lb/1,000 sf
    Red Fescue . . . . 1/2 lb/1,000 sf
    Spreading Fescue . . . . 1/2 lb/1,000 sf
    Lime . . . . 90 lb/1,000 sf
    Fertilizer . . . . 14 lb/1,000 sf
15. Permanent Stabilization Specifications: Mulching
   a. Mulch materials to be unrotted salt hay, hay or small grain straw at the rate of 1.5 to 2 tons per acre or 70 to 90 pounds per 1,000 sq. ft..
   b. Spread uniformly by hand or mechanically so that approximately 75% to 95% of soil surface will be covered.
   c. Mulch anchoring to be done immediately after placement by one of the following methods: Peg and twine; Mulch netting;? Liquid mulch – binders.
16. All unstabilized areas to be sprinkled with water until wet at the beginning of each day to control dust.
17. Any soil having a pH of 4 or less or containing iron sulfides shall be covered with a minimum of 12" of soil having a pH of 5 or more prior to seedbed preparation.
18. At the time of site preparation for permanent vegetative stabilization, any soil not suitable to support adequate vegetative ground cover will be removed or treated in such a way to permanently adjust the soil conditions and render it suitable for vegetative ground cover. (If removal or treatment of the soil will not provide suitable conditions, non-vegetative means of permanent ground stabilization will have to be provided).
19. The Soil Conservation District may request additional measures to minimize on or off-site erosion problems during construction. The District shall be notified in writing 72 hours prior to the commencement of any land disturbance.

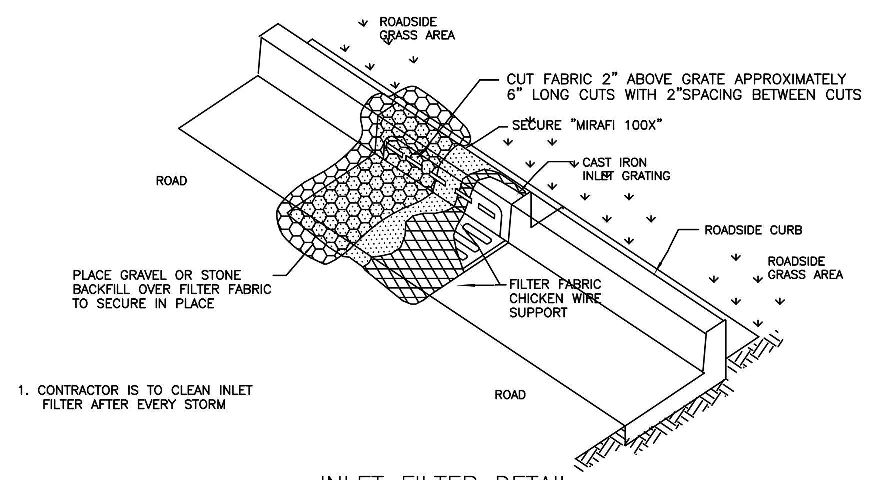

1. CONTRACTOR IS TO CLEAN INLET FILTER AFTER EVERY STORM

INLET FILTER DETAIL

AFTER PAVING
NOT TO SCALE

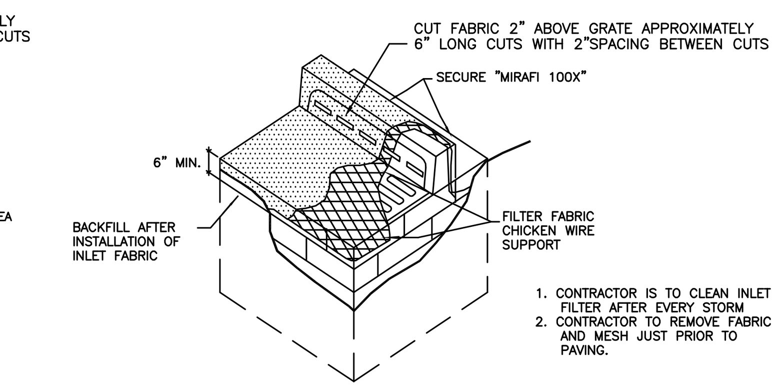

1. CONTRACTOR IS TO CLEAN INLET FILTER AFTER EVERY STORM
2. CONTRACTOR TO REMOVE FABRIC AND MESH JUST PRIOR TO PAVING.

INLET FILTER DETAIL

PRIOR TO PAVING
NOT TO SCALE

SEQUENCE OF CONSTRUCTION

INSTALL SILT FENCE, RAZE BLDG & CLEAR SITE	8 DAY
BEGIN ROUGH GRADING	3 DAYS
CONSTRUCT NEW ADDITION	3 MONTHS
INSTALL DRAINAGE SYSTEM	3 DAYS
FINISH SITE GRADING AND INSTALL LANDSCAPING	5 DAYS
STABILIZE ANY REMAINING DISTURBED AREAS & REMOVE SILT FENCE	1 DAY

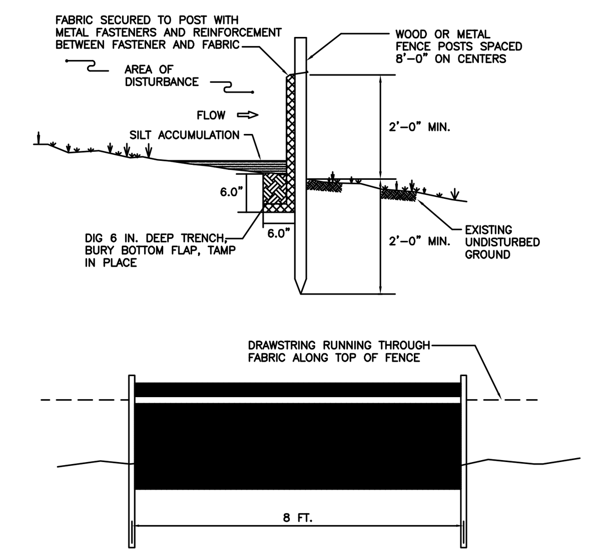

REQUIREMENTS FOR SILT FENCE:

1. FENCE POSTS SHALL BE SPACED 8 FEET CENTER-TO-CENTER OR CLOSER. THEY SHALL EXTEND AT LEAST 2 FEET INTO THE GROUND AND EXTEND AT LEAST 2 FEET ABOVE GROUND (FIG. 25-2). POSTS SHALL BE CONSTRUCTED OF HARDWOOD WITH A MINIMUM DIAMETER THICKNESS OF 1 1/2 INCHES.
2. A METAL FENCE WITH 6 INCH OR SMALLER OPENINGS AND AT LEAST 2 FEET HIGH MAY BE UTILIZED, FASTENED TO THE FENCE POSTS, TO PROVIDE REINFORCEMENT AND SUPPORT TO THE GEOTEXTILE FABRIC WHERE SPACE FOR OTHER PRACTICES IS LIMITED AND HEAVY SEDIMENT LOADING IS EXPECTED.
3. A GEOTEXTILE FABRIC, RECOMMENDED FOR SUCH USE BY THE MANUFACTURER, SHALL BE BURIED AT LEAST 6 INCHES DEEP IN THE GROUND. THE FABRIC SHALL EXTEND AT LEAST 2 FEET ABOVE THE GROUND. THE FABRIC MUST BE SECURELY FASTENED TO THE POSTS USING A SYSTEM CONSISTING OF METAL FASTENERS (NAILS OR STAPLES) AND A HIGH STRENGTH REINFORCEMENT MATERIAL (NYLON WEBBING, GROMMETS, WASHERS, ETC.) PLACED BETWEEN THE FASTENER AND THE GEOTEXTILE FABRIC. THE FASTENING SYSTEM SHALL RESIST TEARING AWAY FROM THE POST. THE FABRIC SHALL INCORPORATE A DRAWSTRING IN THE TOP PORTION OF THE FENCE FOR ADDED STRENGTH.

SILT FENCE

NOT TO SCALE

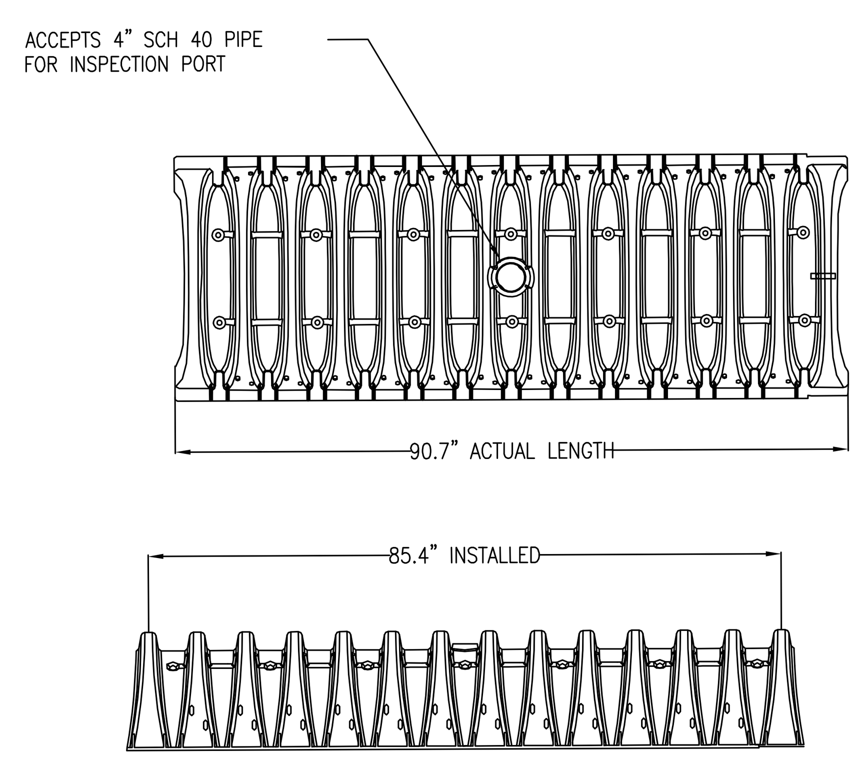

STORMTECH SC-310 CHAMBER

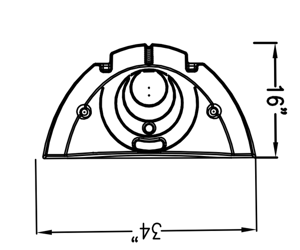

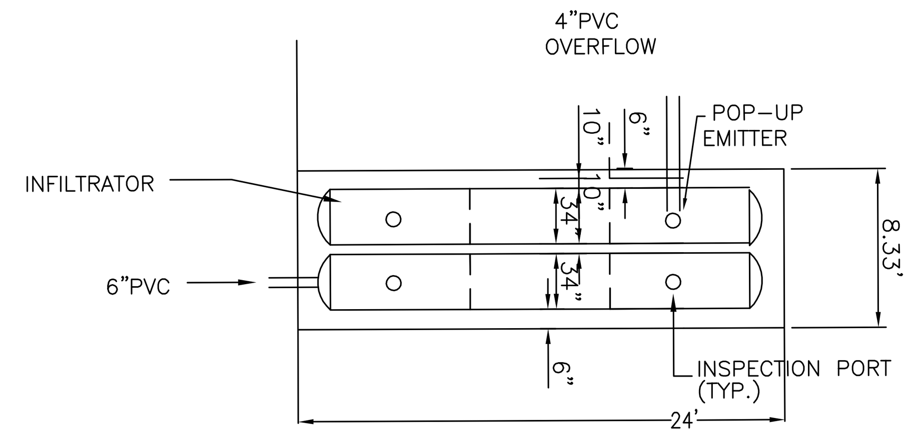

RUNOFF FROM NEW ADDITION = 632 SF
(632 SF)(3.5/12) = 184.33 CF
STORAGE VOLUME OF A STORM TECH CHAMBER WITH A MIN. OF 6" OF STONE BELOW, ABOVE AND BETWEEN CHAMBER ROWS = 31 CF/CHAMBER (INSTALLED CHAMBER LENGTH = 7.1 LF)
184.33 CF/31 = 5.9 CHAMBERS
USE 6 CHAMBERS IN A STONE TRENCH 24' LONG x 8.33' WIDE

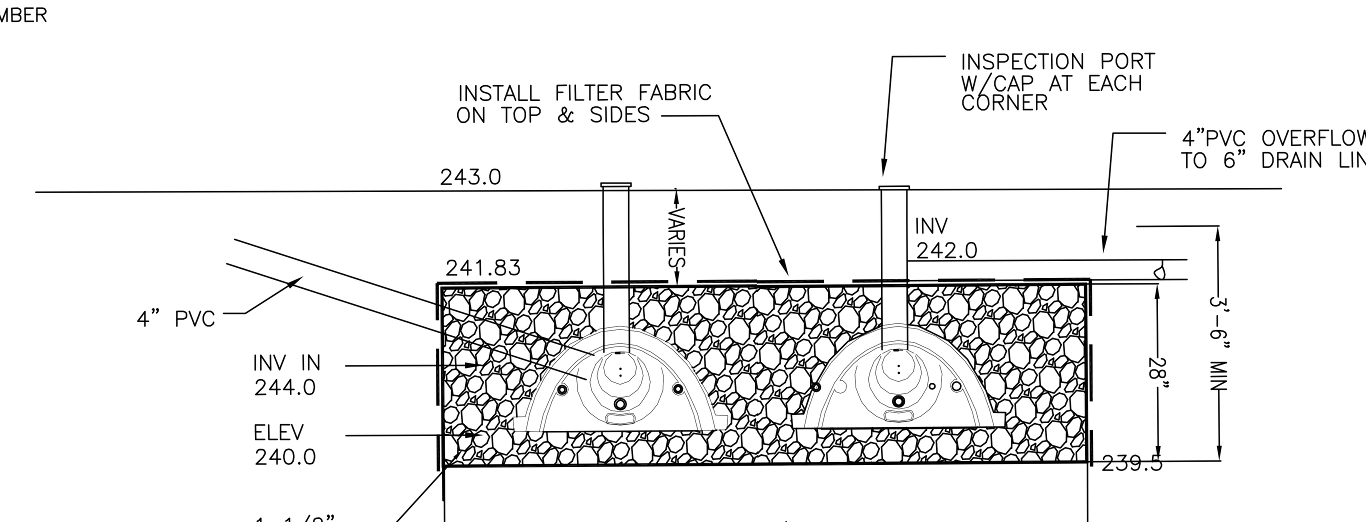

INFILTRATOR BASIN DETAIL

DRAWN BY: SP	CHECKED BY: WGH
JOB No. 19-100	
BOOK	
SCALE 1" – 20' GRAPHIC SCALE	
DATE FEBRUARY 19, 2020	
REVISIONS	
CERTIFICATE OF AUTHORIZATION No. 24GA27959700	
NOTES	

Murphy & Hollows Associates LLC
CIVIL ENGINEERING AND SURVEYING
192 CENTRAL AVENUE, STIRLING, NJ 07980
908.580.1255 murphyhollows@gmail.com

GRADING PLAN
FOR
LOT 3 BLOCK 1702
151 RUTGERS AVENUE
& COLLEGE AVENUE
TOWNSHIP OF
BERKELEY HEIGHTS
UNION COUNTY
NEW JERSEY

AIDAN T. MURPHY
N.J. LIC. PROFESSIONAL ENGINEER #21319
1973–2016

WILLIAM G. HOLLOWS
N.J. LIC. PROFESSIONAL ENGINEER
& LAND SURVEYOR #27473
N.J. PROFESSIONAL PLANNER #2530

FILE	SHEET
LF19-100	2 OF 2

N:\CAD Drawings\2019\19-100\19-100GP3.dwg, 3/19/2020 12:14:34 PM